TOTO

FAUCETS

TLP02308B

ZL Series
Single Lever Lavatory Faucet
(Tall Vessel) (w/o Pop-up Waste)

Features

- Design Concept is Gorgeous and Organic
- TOTO original cartridge for smooth control

Specifications

Finish:	Chrome
Material:	Stainless Steel
Water Pressure:	0.05MPa~1.0MPa

Parts description

- **TLP02308B**
  Single Lever Lavatory Faucet (Tall Vessel)
  (w/o Pop-up Waste)

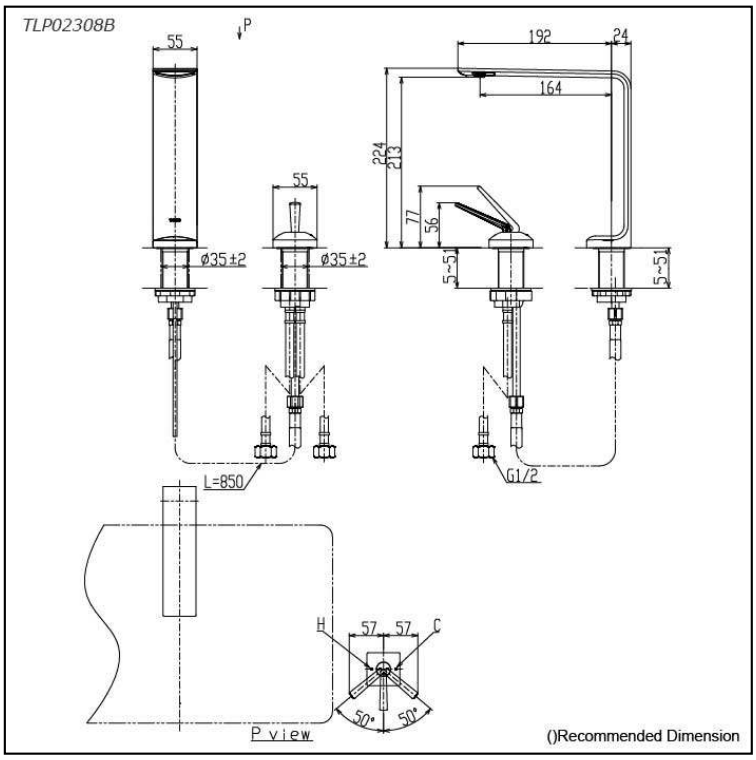

Please consult a TOTO representative for more details

All rights reserved by TOTO company. Specifications and sizes are subject to change without notice.

FAUCETS

Flow Rate

TLP02308B

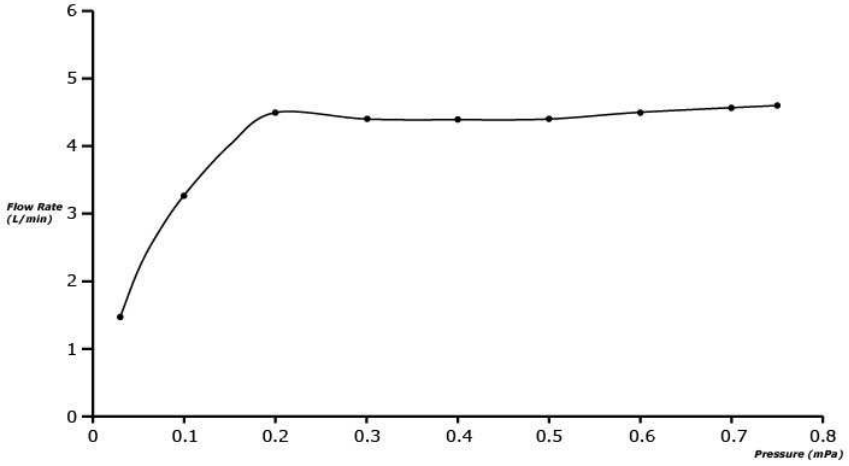

Please consult a TOTO representative for more details

All rights reserved by TOTO company. Specifications and sizes are subject to change without notice.